DRAWING MADE IN THIRD ANGLE PROJECTION

THIS DRAWING IS UNPUBLISHED. RELEASED FOR PUBLICATION ,19 .
© COPYRIGHT 19 BY AMP INCORPORATED. ALL INTERNATIONAL RIGHTS RESERVED.

LOC	DIST
G	86

REVISIONS

P	F	ZONE	LTR	DESCRIPTION	DATE	APPD
			N	REV PER 0G3A-0561-01	08OCT02	JR/MS

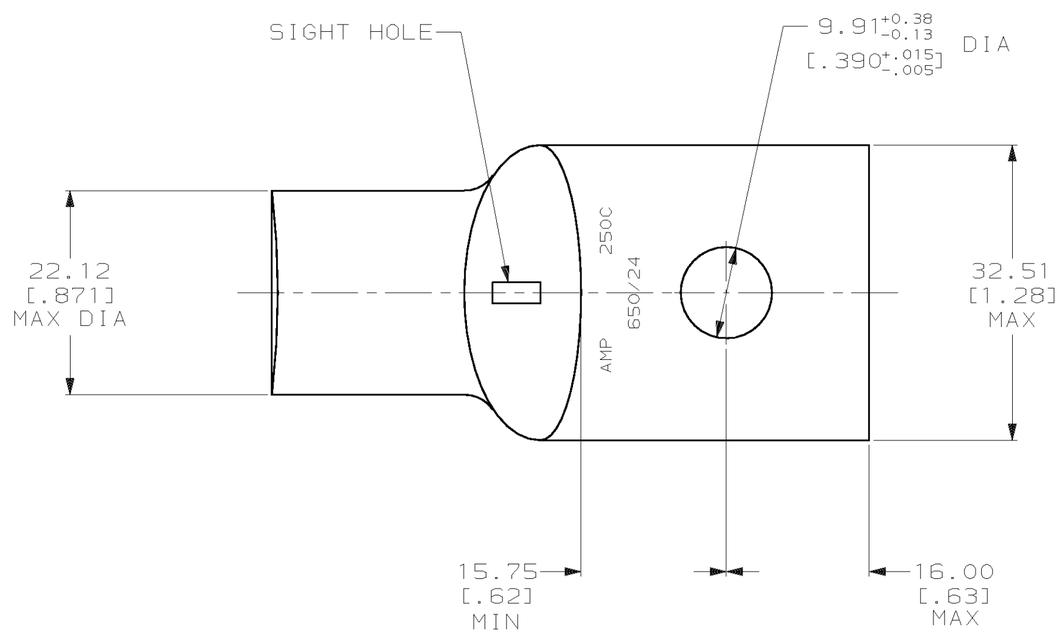

1 CIRCULAR MIL AREA RANGE: 231-275 MCM

2 TIN PL 0.00381[.000150] MIN THK PER MIL-T-10727

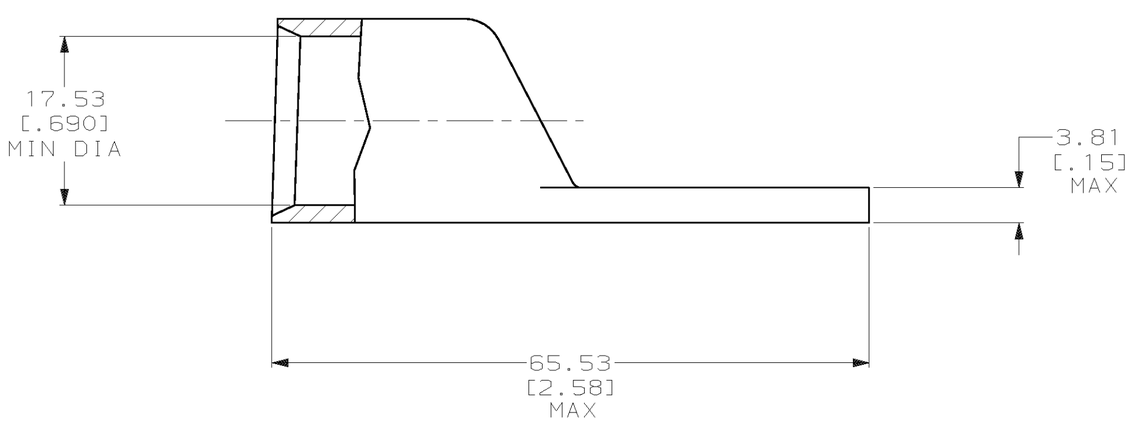

325703

PART NO

DO NOT SCALE PRINT.
UNLESS SPECIFIED
DIMENSIONS IN mm [INCHES]
TOLERANCES ON :
2 PLC DEC ± 0.51[.020]
3 PLC DEC ± -
ANGLES ± -

MATERIAL
ANNEALED COPPER
ASTM B-75

FINISH
2

DR 02/28/90 DK SCHRUM
CHK 20JAN95 MS FEHER
APPD 20JAN95 WJ VOCKROTH
APPD 20JAN95 TL SHUTTER

PRODUCT SPEC
108-30200

APPLICATION SPEC
-

WEIGHT .126 LB

AMP INCORPORATED
Harrisburg, Pa. 17105

NAME
TERMINAL, AMPOWER,
WIRE SIZE: 250 MCM

SIZE C | CAGE CODE 00779 | DRAWING NO 325703

SCALE 2:1 | SHEET 1 OF 1

METRIC

AMP 1471-6 REV 6-89

CUSTOMER DRAWING

20-JAN-95 08:58:37 amp26463 /files/dept1123/dwg1123/u.ampower/u.rect-tongue